LSRPL8451HC
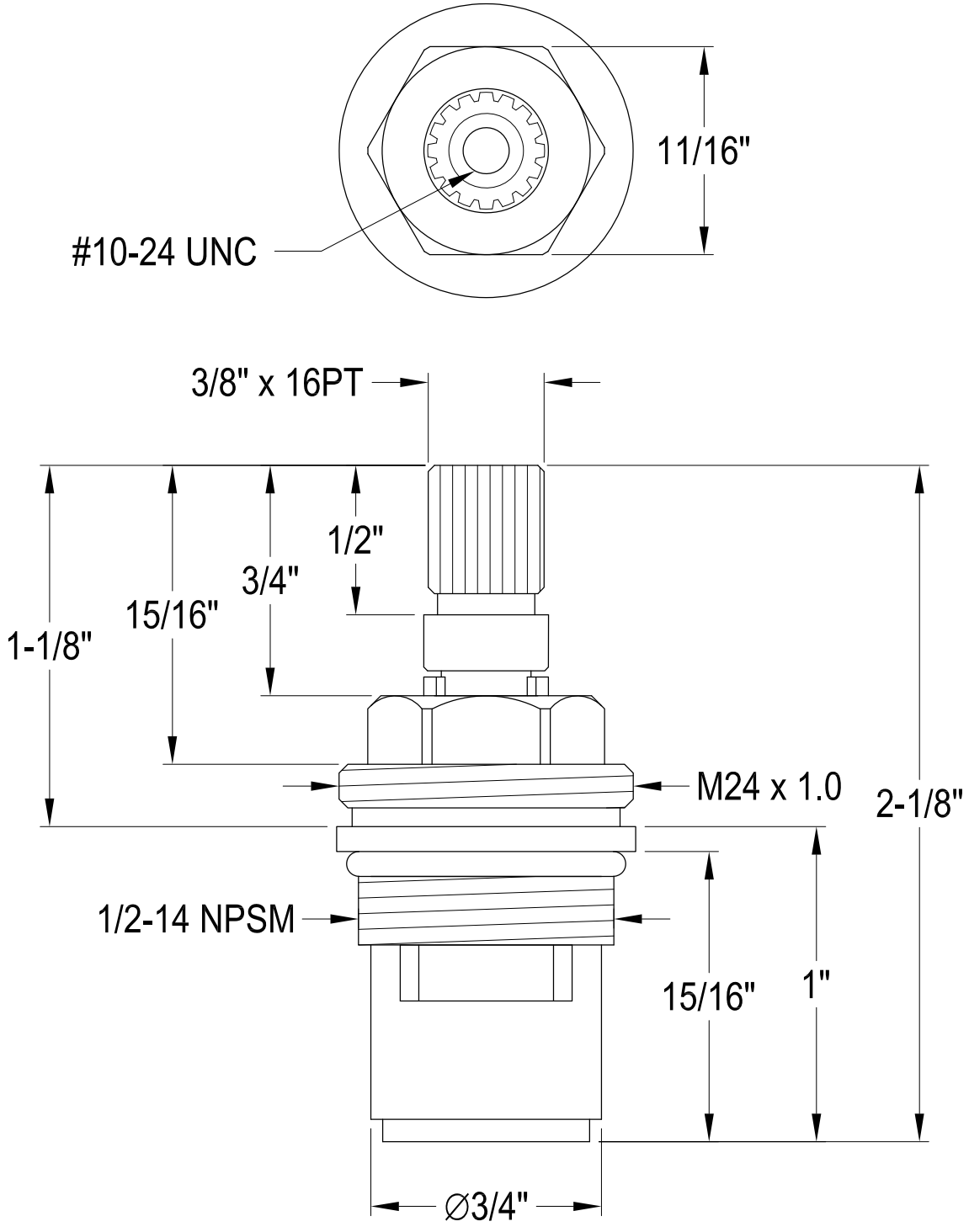
Cartridge,Hot